Current part is item (3) on diagram. Available at www.oshkoshequipment.com

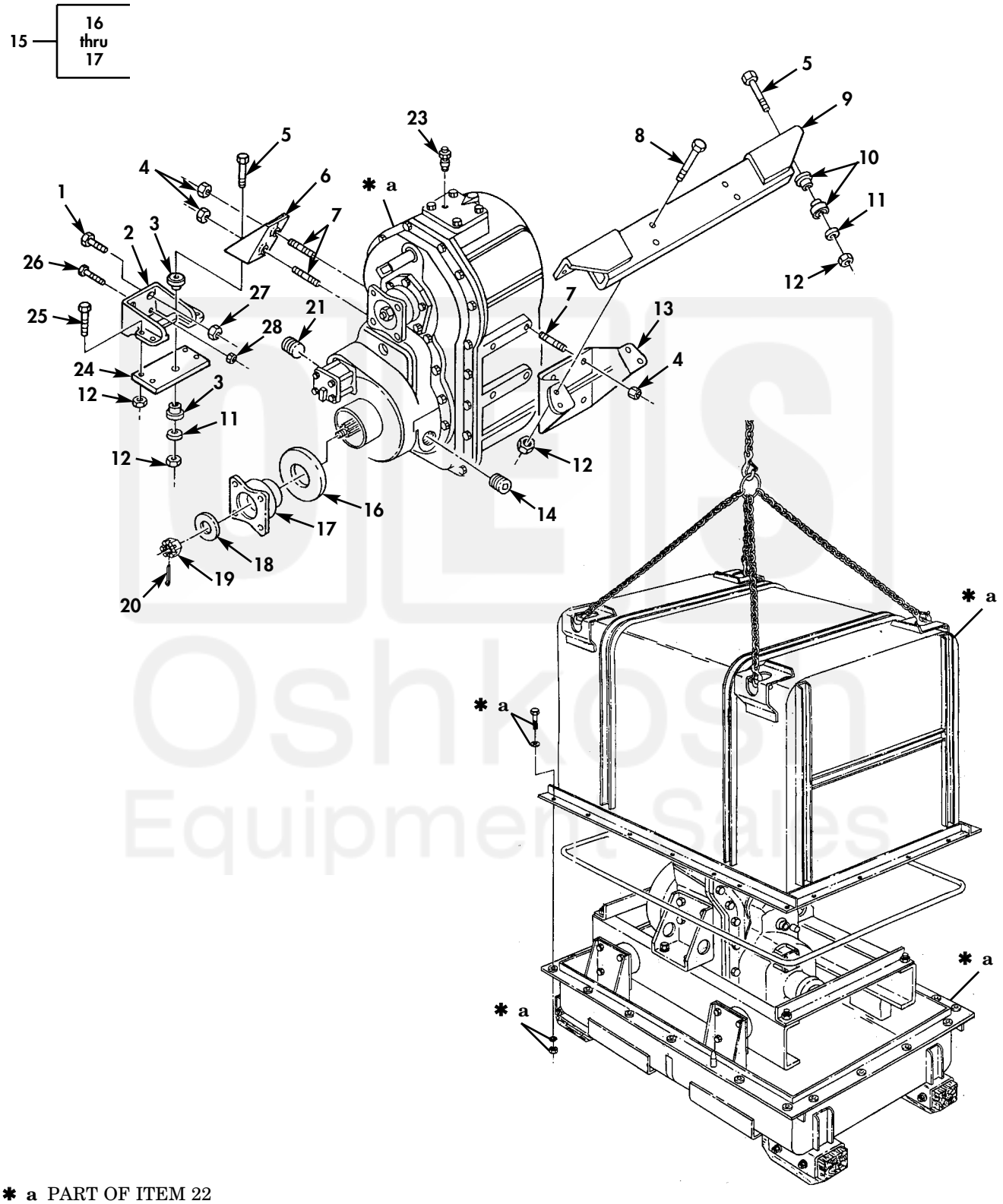

✱ a PART OF ITEM 22

Figure 56. Power Transfer, Mounting Hardware, and Related Parts.

Current part is item (3) on diagram. Available at www.oshkoshequipment.com

Current part is item (3) on diagram. Available at www.oshkoshequipment.com

(1) ITEM NO	(2) SMR CODE	(3) NSN	(4) CAGEC	(5) PART NUMBER	(6) DESCRIPTION AND USABLE ON CODE (UOC)	(7) QTY
					GROUP 08 TRANSFER ASSEMBLY	
					0801 POWER TRANSFER ASSEMBLY	
					FIG. 56 POWER TRANSFER,MOUNTING HARDWARE,AND RELATED PARTS	
1	PAFZZ	5305-00-725-4183	96906	MS90726-113	SCREW,CAP,HEXAGON H.....	1
2	PFFZZ	5340-00-134-4985	19207	7521798	BRACKET,ANGLE.....	1
3	PAFZZ	5342-00-040-2073	19207	7521436	MOUNT,RESILIENT.....	2
4	PAFZZ	5310-00-241-6664	96906	MS51943-44	NUT,SELF-LOCKING,HE.....	6
5	PAFZZ	5306-00-752-1548	19207	7521548	BOLT,SHOULDER.....	3
6	PAFZZ	3040-00-752-1370	19207	7521370	BRACKET,EYE,NONROTA RIGHT SIDE.....	1
7	PAFZZ	5307-00-695-7213	19207	8331791	STUD,PLAIN.....	6
8	PAFZZ	5305-00-716-8181	80205	MS90726-118	SCREW,CAP,HEXAGON H.....	4
9	PAFZZ	2510-00-406-4590	19207	11609704	SUPPORT,TRANSFER,TR.....	1
10	PAFZZ	5342-00-178-1377	19207	10897046	MOUNT,RESILIENT,WEA.....	4
11	PAFZZ	5310-00-022-3305	19207	10897126	WASHER,FLAT.....	3
12	PAFZZ	5310-00-488-3888	96906	MS51943-40	NUT,SELF-LOCKING,HE.....	11
13	PAFZZ	2520-00-137-1701	19207	11609187	SUPPORT,VEHICLE LEFT.....	1
14	PAOZZ	4730-00-737-5248	19207	8757704	PLUG,PIPE.....	1
15	PFOZZ	2520-00-752-1276	78500	A3897E863	FLANGE,COMPANION,VE.....	2
16	PAOZZ	2520-00-692-6080	58275	913648	.DEFLECTOR,DIRT AND.....	1
17	PAOZZ	2520-00-134-5124	19207	8757674	.FLANGE,COMPANION,VE.....	2
18	PAOZZ	5310-00-752-1235	58275	913701	WASHER,FLAT.....	3
19	PAOZZ	5310-01-173-0120	19207	7521234	NUT,PLAIN,SLOTTED,H.....	3
20	PAOZZ	5315-00-013-7214	96906	MS24665-359	PIN,COTTER.....	3
21	PAOZZ	4730-00-737-5249	19207	7375249	PLUG,PIPE,MAGNETIC.....	1
22	PAFHH	2520-01-423-3640	19207	57K3351	TRANSFER TRANSMISSION	1
23	PAOZZ	4820-00-726-4719	19207	5196397	VALVE,VENT.....	1
24	PAFZZ	2520-00-197-5343	19207	7372764	PLATE,MOUNTING,TRAN.....	1
25	PAFZZ	5305-00-719-5235	80204	B1821BH050F175N	SCREW,CAP,HEXAGON H.....	4
26	PAFZZ	5305-00-269-3240	80204	B1821BH038F150N	SCREW,CAP,HEXAGON H.....	1
27	PAFZZ	5310-00-877-5795	96906	MS21044N8	NUT,SELF-LOCKING,HE.....	1
28	PAFZZ	5310-00-959-1488	81349	M45913/2-6FG5C	NUT,SELF-LOCKING,HE.....	1

END OF FIGURE

Current part is item (3) on diagram. Available at www.oshkoshequipment.com